

User Manual

X5 Dot Wash

Document revision: 20261111-01

GLP German Light Products

Document revisions

Revision number	Notes	Date released
20261111-01 (Rev A)		November 2026

GLP X5 Dot Wash User Manual

© 2026 German Light Products GmbH. All rights reserved.

The marks ‘GLP’ and ‘German Light Products’ are trademarks registered as the property of German Light Products GmbH in Germany, in the United States of America and in other countries.

The information contained in this document is subject to change without notice. German Light Products GmbH and all affiliated companies disclaim liability for any injury, damage, direct or indirect loss, consequential or economic loss or any other loss occasioned by the use of, inability to use or reliance on the information contained in this document.

Manufacturer’s head office

GLP German Light Products GmbH, Industriestrasse 2, 76307 Karlsbad, Germany
Tel (Germany): +49 7248 92719-0

Service & Support EMEA

GLP, Industriestrasse 2, 76307 Karlsbad, Germany
Tel: +49 7248 9271955 | support@glp.de | www.glp.de

Service & Support USA

GLP USA
Tel: +1 818 767 8899 | info@germanlightproducts.com
www.germanlightproducts.com

Service & Support UK Ltd.

GLP UK
Tel: +44 1392 690140 | uk@glp.de
www.glp.de

Table of Contents

Safety **5**

Key to symbols 5

General safety information 5

Electrical safety 6

Fire safety and protection from burns 6

Eye safety 7

Strobe safety 7

Installation safety and protection from personal injury 7

Avoiding damage to the fixture **8**

General precautions 8

Avoiding damage from light sources 8

Avoiding damage from dust and airborne particles 8

Transportation and storage 9

Features **10**

Light source 10

Control options 10

Zoom 10

Dimmer 10

Shutter 10

CTC 10

System **11**

Connection 12

Mounting **13**

Floorstand 13

Hanging Yoke 13

Hanging Pendant 15

Camera or microphone tripod 16

Setting up the control protocol **17**

Auto 17
DMX 17
iQ.Mesh 17
NFC 17

Safety

Key to symbols

The following symbols are used in the user documentation and on the product:

Symbol	Label	Meaning
	WARNING	Safety hazard. Risk of severe injury or death.
	WARNING – VOLTAGE	Hazardous voltage. Risk of lethal or severe electric shock.
	WARNING – FIRE	Fire hazard.
	WARNING – EYES	Risk of eye injury.
	WARNING – HOT SURFACE	Hot surface. Risk of burn injury.
	NOTE	See the user documentation for important safety information.

General safety information

Read this section and the safety instructions (packaged with the fixture) carefully before installing or using the product. If you have any doubts or questions about how to use the product safely, contact your GLP supplier for assistance.

The X5 Dot Wash and this user documentation are intended for use by experienced professionals with the knowledge and skills to set up, operate and maintain remotely controlled lighting equipment safely and efficiently.

- Respect all warnings and directions given in the fixture's user documentation and on the fixture.
- The manufacturer takes no responsibility for damage or harm resulting from disregard of this information.
- Check www.glp.de for the latest version of this manual, and check that the firmware version stated on page 2 matches the version installed in the product.
- Make all user documentation available to everyone who will install, operate or service the fixture, and keep

it for future reference.

- Use the product only as directed in this manual. Refer any service operation not described here, and all repairs, to a technician authorized by GLP.
- The light source in this product must not be changed.
- Read and follow the user documentation for all additional equipment.

Electrical safety

- Do not allow the product to come into contact with water or moisture.
- Use only an AC mains supply that complies with local building and electrical codes and has both overload and ground-fault (earth-fault) protection.
- Ensure that the product is electrically connected to ground (earth).
- Disconnect the product from AC mains power before any installation or maintenance work and when it is not in use.
- powerCON connectors are not suitable for hot-plugging. Locate power outlets or switches near the product so it can be disconnected easily.
- Disconnect the product from power immediately if the power plug or any seal, cover, cable or other component is damaged, defective, deformed, wet or shows signs of overheating. Do not reapply power until the product has been repaired by a technician authorized by GLP.
- Before use, check that all power distribution equipment and cables are in perfect condition and rated for the electrical requirements of all connected devices.
- If a fuse blows, replace it only with one of the original type and rating ([fuse type and rating]). If new fuses blow, disconnect the product and send it to an authorized technician.
- [Power daisy-chain limits: maximum number of fixtures per circuit at each supply voltage, and cable rating.]

Fire safety and protection from burns

- Do not operate the product if the ambient temperature exceeds [max. ambient temperature].
- The surface of the casing can become hot during operation. Avoid contact by persons and materials, and allow the product to cool before handling.
- Keep all combustible materials (for example fabric, wood, paper) at least [distance] away from the product.
- Ensure free and unobstructed airflow around the product and its air vents.
- Do not illuminate surfaces closer than [distance] to the product.
- Do not stick filters, masks or other materials onto optical components.
- The optical components can focus the sun's rays, creating a risk of fire and damage. Do not expose the front of the product to sunlight or any other intense light source, even from an angle.

Eye safety

WARNING – EYES The X5 Dot Wash is classified as [Risk Group per EN 62471] according to EN 62471. Possibly hazardous radiation is emitted.

- Do not stare into the light output. It may be harmful to the eyes.
- Do not look at the light output with optical instruments or any device that may concentrate it.
- Make sure persons working on or near the product are not looking directly into the light output when it lights up suddenly, for example when power is applied, when a DMX signal is received or when certain menu items are selected.
- Provide well-lit conditions to reduce the pupil diameter of anyone working on or near the product.

Strobe safety

- Flashing light, particularly at 5–30 Hz, may cause seizures in persons with photosensitive epilepsy. Do not use strobe effects for extended periods.
- Comply with local regulations on the use of strobe lighting and warn the public in advance with highly visible signs.
- If a seizure occurs, stop using strobe effects and seek professional medical help. Call emergency services if the seizure lasts more than five minutes, if it is the person's first seizure, or if the person is injured.

Installation safety and protection from personal injury

- Installation must be performed by qualified personnel only and in accordance with applicable local regulations (such as DIN VDE 0711-217).
- Ensure that the supporting structure and installation hardware can hold at least 10 times the weight of the load they support.
- Suspend the product with hardware specifically designed and rated for the purpose, in perfect condition. Fasteners must be steel grade 8.8 or better. Rigging clamps must be half-coupler type that completely encircle the truss chord.
- If the product is installed where it may cause injury or damage if it falls, install a safety cable or similar secondary attachment that will hold the product if the primary attachment fails. It must be approved for the weight it secures, comply with EN 60598-2-17 Section 17.6.6 and support a static load of ten times that weight. Never use safety cables as the primary means of support.
- [Minimum center-to-center spacing between fixtures so heads can move without collision.]
- Check that all covers and rigging hardware are secure. Do not operate the product with missing or damaged covers, shields or optical components.
- Restrict access below the work area and work from a stable platform whenever installing, servicing or moving the product.
- If the product becomes damaged, stop using it immediately and disconnect it from power.
- Do not modify the product in any way not described in this manual. Install genuine GLP parts only.

Avoiding damage to the fixture

General precautions

- Use only original spare parts. Any structural modification of the fixture voids the product warranty.
- Inspect the fixture regularly and clean it only as directed in this manual. Oils, solvents and other chemicals can damage lens coatings and surfaces.
- Do not drop the fixture or expose it to mechanical stress or to heat from other fixtures.
- Do not pick up or carry the fixture by the front lens or by the LCD display. Damage caused this way is not covered by the warranty.

Avoiding damage from light sources

Do not point the front of the fixture towards the sun or other strong light sources. The front lens focuses and concentrates light like a magnifying glass. Strong light can cause internal damage, melt components or start an internal fire within seconds, whether the fixture is powered on or off. Damage can also occur if the light hits the front of the fixture at an angle.

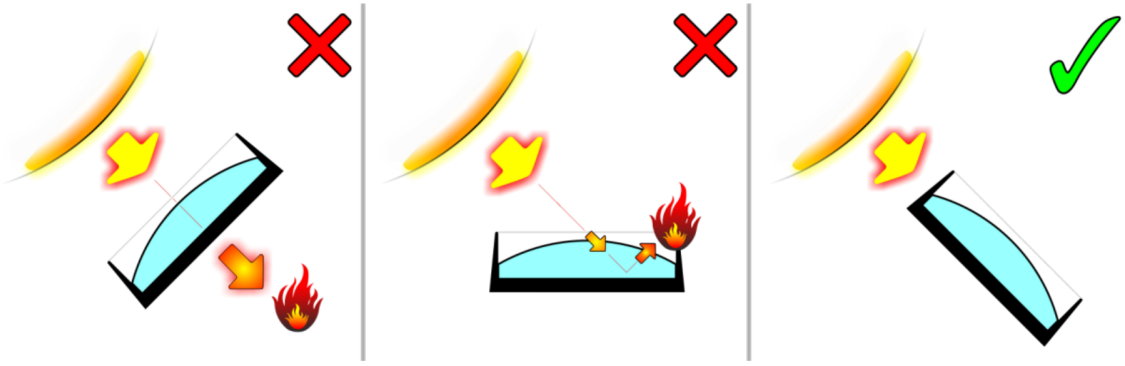

Avoiding damage from light sources: the lens can focus sunlight (left, middle); keep the front shielded or pointed away (right).

- Do not expose the front of the fixture to sunlight or any other strong light source.
- In daylight applications, shield the front of the fixture or point it away from the sun, even when not in use.
- Avoid pointing other high-powered lights directly at the fixture.

Avoiding damage from dust and airborne particles

Dust, smoke fluid residue and other airborne particles reduce light output and can damage the fixture. Keep the fixture and its air vents clean (see Service and maintenance). The permitted environment is dry, indoor, with an ambient temperature of 5°C to 45°C.

Transportation and storage

Transport the fixture in a flightcase or in its original packaging to protect it from shocks. Store the fixture in a dry location when not in use.

Features

Light source

The fixture has one RGBL LED with 10–20 W power and up to 550 lm output. The color temperature range is 3,200–8,000 K. The color rendering is high: CRI (Ra) 87 at 8,000 K and 84 at 3,200 K, TLCI 90 and TM-30-15 87 / 105 at 6500K. The LED refresh rate is 3 kHz.

Control options

The fixture is controlled with DMX (USITT DMX512-A) and RDM (ANSI/ESTA E1.20) and can be set up and updated with GLP iQ.Mesh. It has two control modes (4 or 7 DMX channels).

Zoom

The fixture has a manual zoom of 16 to 68 degrees. An indication of the angle setting is provided on the side of the fixture.

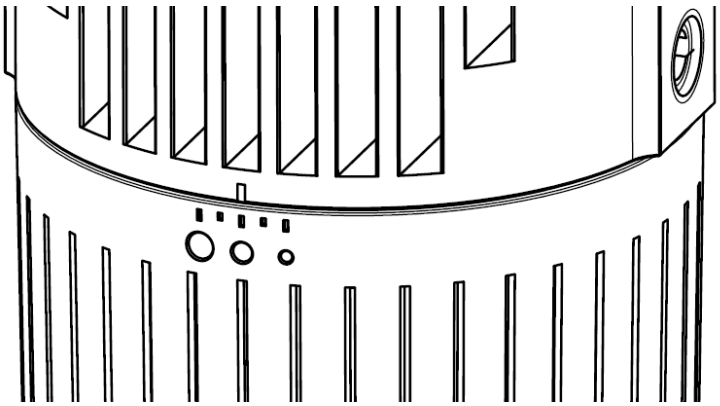

Zoom indictator on the side of the fixture

Dimmer

The dimmer has 16-bit resolution with a square dimming curve.

Shutter

The fixture offers a shutter channel with single flash, pulse, double flash, random and strobe sync.

CTC

The fixture offers a variable color temperature control (CTC) from cold to warm.

System

The unit is part of a system. Within this system currently the following components are offered:

- Fixtures:
  - TW Dot Wash (this product)
  - TW Pinspot
  - X5 Dot Wash
- 4-Pin XLR extension cables
- 4-Pin XLR Y-split cable
- Seetronic True1 Power cable 1.5m
- PSUs:
  - PSU1-65: 65W PSU to be used with maximal 3 fixtures (any of the mentioned above)
  - PSU1-150: 144W PSU to be used with maximal 7 fixtures (any of the mentioned above)
  - X5 Atom PSU: The Dot series can be used with the X5 Atom PSU with a single fixture on each output and the PSU configured in the dedicated 'booster' mode for the Dot series. Refer to the release notes of the X5 Atom PSU.

For a minimal system a user thus needs:

- Fixture
- PSU: this can be user supplied and is compatible with legacy PSU's.
- Power cable

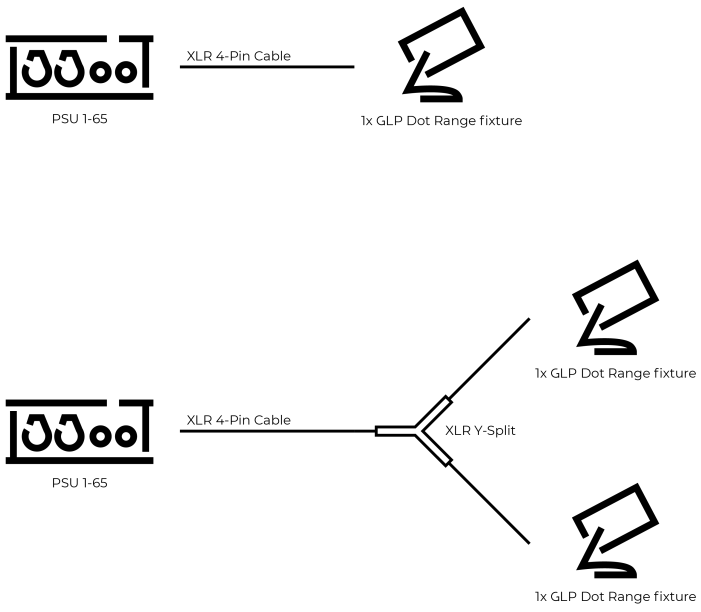

Direct connection and single Y-split connection

We recommend linking no more than two (PSU1-65) or six (PSU1-150) Y-Split Cables in a single chain. On

each Y-Split Cable, one branch must connect directly to a fixture; only the other branch may be extended. Extending both branches is not permitted.

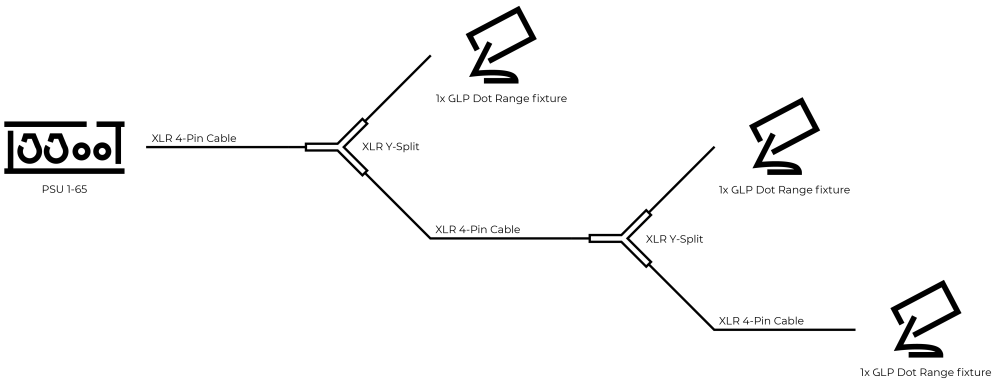

Double Y-split example

Connection

The fixture provides a 4-Pin Seetronic XLR connector with the following pin out:

Pin	Signal
1	Ground
2	DMX Data + (hot)
3	DMX Data − (cold)
4	V+ (24-48V DC)

Mounting

Floorstand

The yoke provides two feet that can be used to mount the fixture floor/table standing.

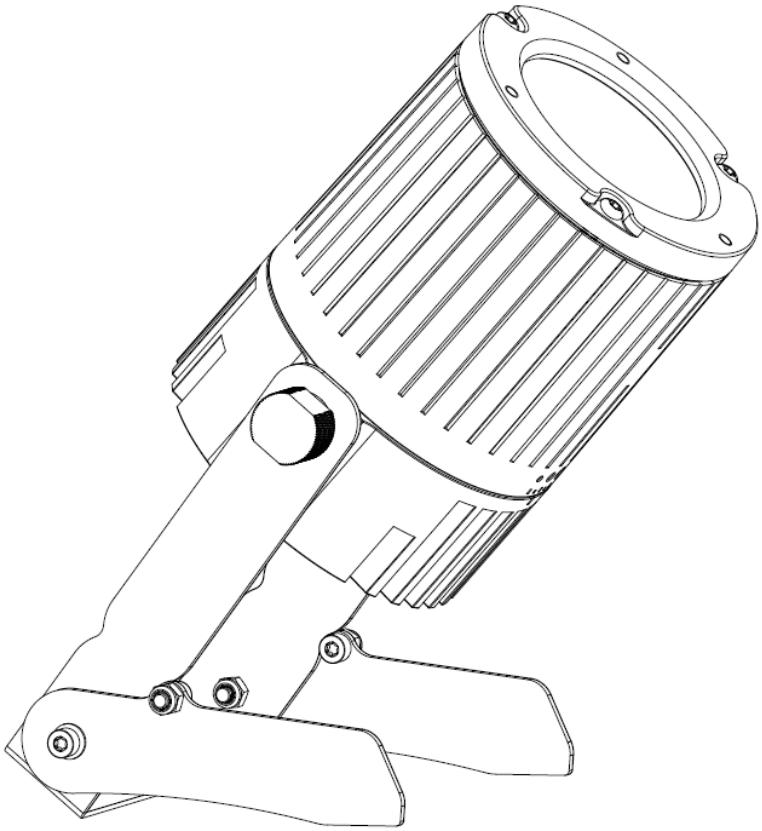

Standing on the two integrated feet in the yoke

Hanging Yoke

The yoke can be used to mount an truss clamp. For safety either the back bracket (pendant bracket) or an eyelet can be used (available as an accessory).

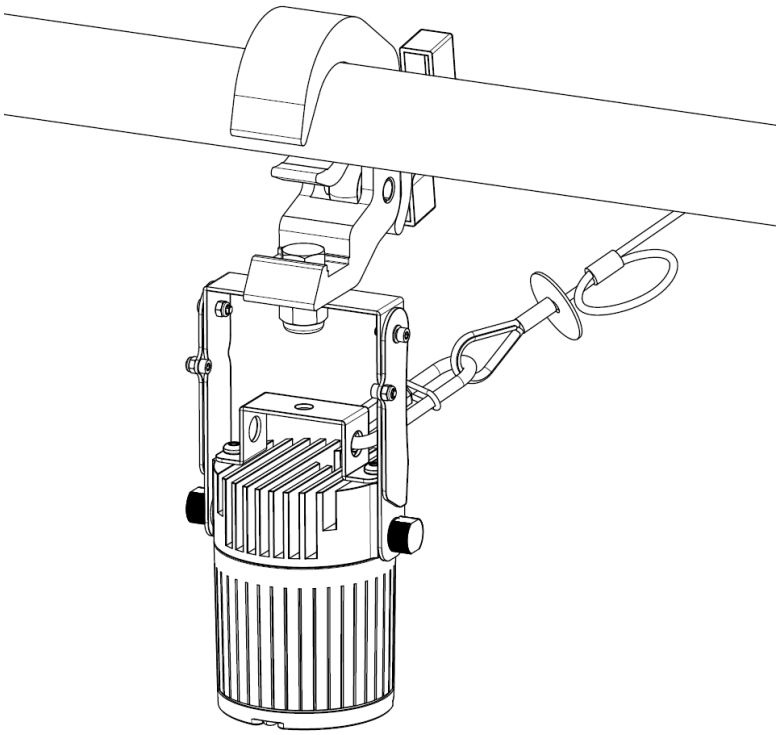

Hanging with safety on the back bracket

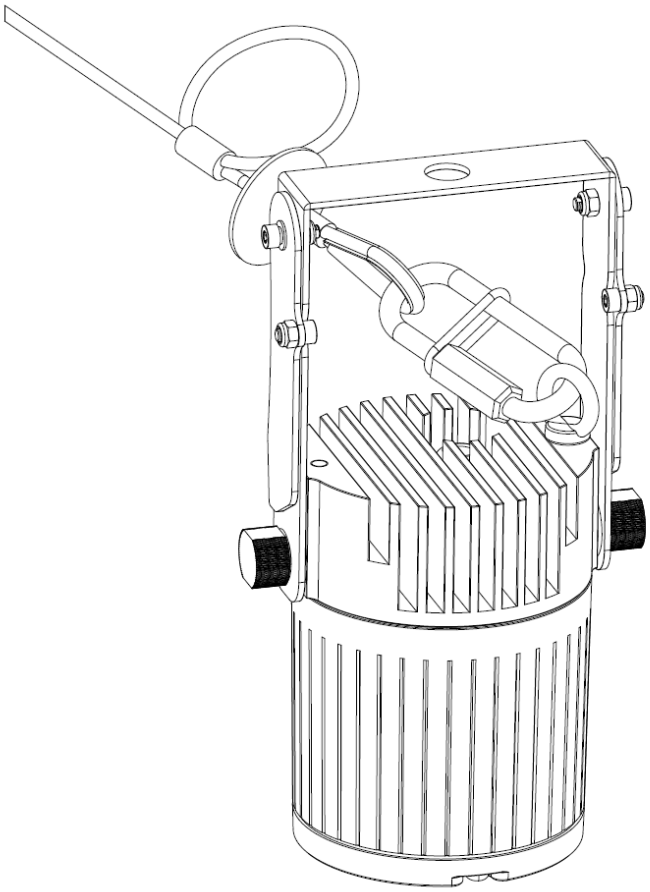

Using an eyelet to mount the safety cable

Hanging Pendant

With the yoke removed, the back bracket (pendant bracket) can be used in combination with a hollow threaded rod (not supplied) to hang the fixture straight down as a pendant.

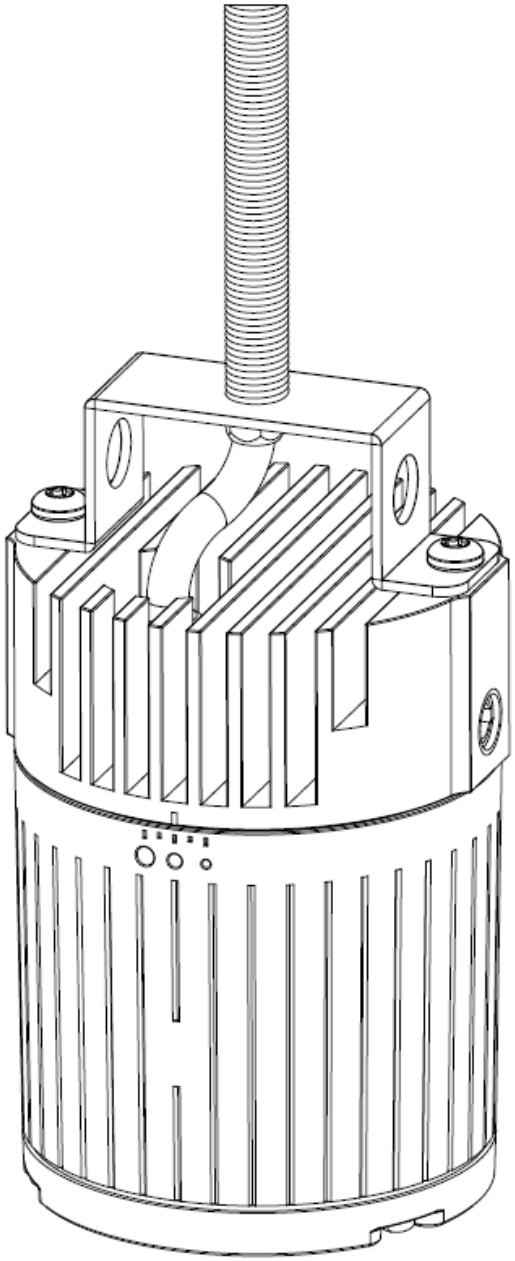

Straight down pendant mounting

Camera or microphone tripod

The fixture offers a UNC1/4 and UNC3/8 thread option to be mounted on a camera or microphone tripod. For this the yoke needs to be removed and an insert can be removed to switch between the two thread options.

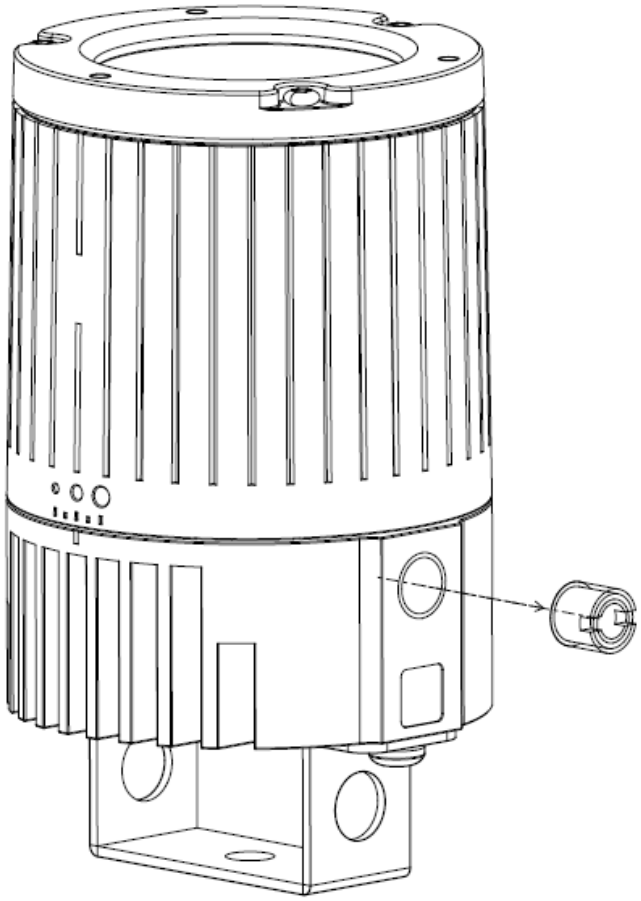

Adaptor insert UNC1/4 to UNC3/8

Setting up the control protocol

As this fixture has no display and buttons the following 3 behaviors were implemented:

Auto

When DMX Input is active it disables NFC and iQ.Mesh. When no DMX Input is present, NFC and iQ.Mesh are active. DMX has the highest priority, RDM is enabled. When iQ.Mesh is enabled, NFC is disabled.

DMX

iQ.Mesh is always disabled. When DMX is present, it disables NFC. When no DMX Input is present, NFC is active. RDM is enabled.

iQ.Mesh

The physical DMX input is disabled. NFC is only enabled when there is no iQ.Mesh Connection DMX data is disabled, however DMX RDM is still processed.

NFC

Users should consider NFC as a setup/bootstrap tool.