

User Manual

PSU1-150

Document revision: 20261117-01

GLP German Light Products

Document revisions

Revision number	Notes	Date released
20261111-01 (Rev A)		November 2026

GLP PSU1-150 User Manual

© 2026 German Light Products GmbH. All rights reserved.

The marks ‘GLP’ and ‘German Light Products’ are trademarks registered as the property of German Light Products GmbH in Germany, in the United States of America and in other countries.

The information contained in this document is subject to change without notice. German Light Products GmbH and all affiliated companies disclaim liability for any injury, damage, direct or indirect loss, consequential or economic loss or any other loss occasioned by the use of, inability to use or reliance on the information contained in this document.

Manufacturer’s head office

GLP German Light Products GmbH, Industriestrasse 2, 76307 Karlsbad, Germany
Tel (Germany): +49 7248 92719-0

Service & Support EMEA

GLP, Industriestrasse 2, 76307 Karlsbad, Germany
Tel: +49 7248 9271955 | support@glp.de | www.glp.de

Service & Support USA

GLP USA
Tel: +1 818 767 8899 | info@germanlightproducts.com
www.germanlightproducts.com

Service & Support UK Ltd.

GLP UK
Tel: +44 1392 690140 | uk@glp.de
www.glp.de

Table of Contents

Safety **4**

Key to symbols 4

General safety information 4

Electrical safety 5

Fire safety and protection from burns 5

Installation safety and protection from personal injury 5

Transportation and storage 6

Features **7**

Power 7

Output indicator 7

Daisy chaining 7

Rigging bracket 7

Fuse 8

Fixture Settings **9**

Connection 10

Mounting **11**

Safety Eyelet 11

Truss Mounting 11

Wall Mounting 12

Technical specifications **13**

Connections 13

Electrical 13

Construction and installation 13

Thermal 13

Dimensions **14**

Safety

Key to symbols

The following symbols are used in the user documentation and on the product:

Symbol	Label	Meaning
	WARNING	Safety hazard. Risk of severe injury or death.
	WARNING – VOLTAGE	Hazardous voltage. Risk of lethal or severe electric shock.
	WARNING – FIRE	Fire hazard.
	WARNING – EYES	Risk of eye injury.
	WARNING – HOT SURFACE	Hot surface. Risk of burn injury.
	NOTE	See the user documentation for important safety information.

General safety information

Read this section and the safety instructions (packaged with the fixture) carefully before installing or using the product. If you have any doubts or questions about how to use the product safely, contact your GLP supplier for assistance.

The PSU1-150 and this user documentation are intended for use by experienced professionals with the knowledge and skills to set up, operate and maintain remotely controlled lighting equipment safely and efficiently.

- Respect all warnings and directions given in the fixture's user documentation and on the fixture.
- The manufacturer takes no responsibility for damage or harm resulting from disregard of this information.
- Check www.glp.de for the latest version of this manual, and check that the firmware version stated on page 2 matches the version installed in the product.
- Make all user documentation available to everyone who will install, operate or service the fixture, and keep it for future reference.

- Use the product only as directed in this manual. Refer any service operation not described here, and all repairs, to a technician authorized by GLP.
- The light source in this product must not be changed.
- Read and follow the user documentation for all additional equipment.

Electrical safety

- Do not allow the product to come into contact with water or moisture.
- Use only an AC mains supply that complies with local building and electrical codes and has both overload and ground-fault (earth-fault) protection.
- Ensure that the product is electrically connected to ground (earth).
- Disconnect the product from AC mains power before any installation or maintenance work and when it is not in use.
- powerCON connectors are not suitable for hot-plugging. Locate power outlets or switches near the product so it can be disconnected easily.
- Disconnect the product from power immediately if the power plug or any seal, cover, cable or other component is damaged, defective, deformed, wet or shows signs of overheating. Do not reapply power until the product has been repaired by a technician authorized by GLP.
- Before use, check that all power distribution equipment and cables are in perfect condition and rated for the electrical requirements of all connected devices.
- If a fuse blows, replace it only with one of the original type and rating (5x20mm T3.15A). If new fuses blow, disconnect the product and send it to an authorized technician.
- [Power daisy-chain limits: maximum number of fixtures per circuit at each supply voltage, and cable rating.]

Fire safety and protection from burns

- Do not operate the product if the ambient temperature exceeds 45 degrees Celsius.
- The surface of the casing can become hot during operation. Avoid contact by persons and materials, and allow the product to cool before handling.
- Keep all combustible materials (for example fabric, wood, paper) at least 0.1m away from the product.
- Ensure free and unobstructed airflow around the product.

Installation safety and protection from personal injury

- Installation must be performed by qualified personnel only and in accordance with applicable local regulations (such as DIN VDE 0711-217).
- Ensure that the supporting structure and installation hardware can hold at least 10 times the weight of the load they support.
- Suspend the product with hardware specifically designed and rated for the purpose, in perfect condition. Fasteners must be steel grade 8.8 or better. Rigging clamps must be half-coupler type that completely encircle the truss chord.
- If the product is installed where it may cause injury or damage if it falls, install a safety cable or similar secondary attachment that will hold the product if the primary attachment fails. It must be approved for the

weight it secures, comply with EN 60598-2-17 Section 17.6.6 and support a static load of ten times that weight. Never use safety cables as the primary means of support.

- Check that all covers and rigging hardware are secure. Do not operate the product with missing or damaged covers, shields or optical components.
- Restrict access below the work area and work from a stable platform whenever installing, servicing or moving the product.
- If the product becomes damaged, stop using it immediately and disconnect it from power.
- Do not modify the product in any way not described in this manual. Install genuine GLP parts only.

Transportation and storage

Transport the product in a flightcase or in its original packaging to protect it from shocks. Store the product in a dry location when not in use.

Features

The PSU1-150 is a lightweight power supply for the GLP Dot family of products.

Power

The PSU1-150 provides up to 165W of power at 48V DC for a maximum up to 7 GLP Dot family products.

Output indicator

The PSU1-150 has a LED indicator next to the 4Pin XLR output connector that shows active power on the output connector.

Daisy chaining

The product provides an powerCon True1 and XLR 5-Pin output connector so that multiple units can be daisy chained.

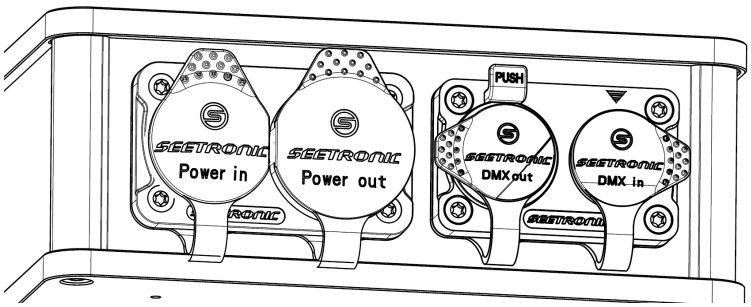

Power/Signal in and out

Rigging bracket

The product is supplied with a rigging bracket that can be used to hang the fixture on a truss or mount on a wall.

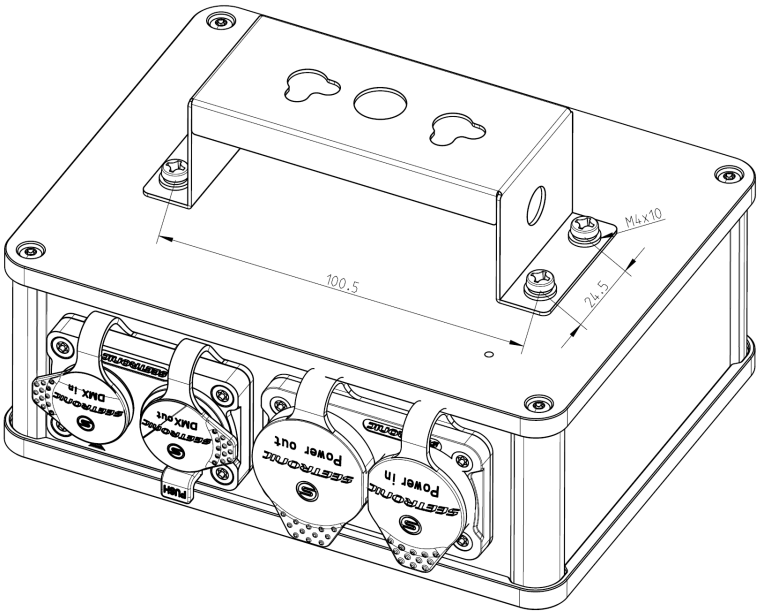

Rigging Bracket

Fuse

The product is supplied with 5x20mm Fuse internally that can be user serviced.

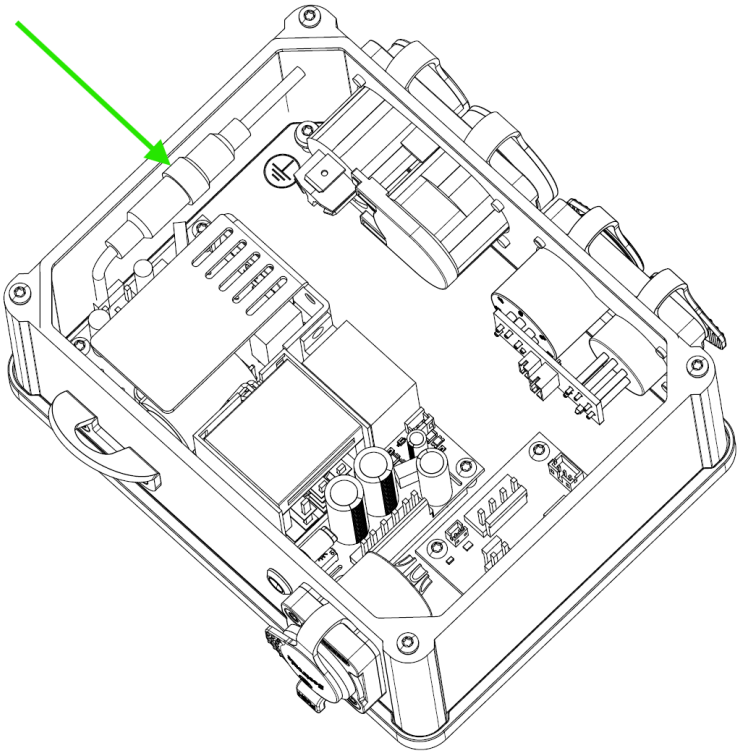

Fuse Location

Fixture Settings

The unit is part of a system. Within this system currently the following components are offered:

- PSUs:
  - PSU1-150 (this product): 165W PSU to be used with maximal 7 fixtures (any of the mentioned above)
  - PSU1-65: 75W PSU to be used with maximal 3 fixtures (any of the mentioned above)
  - X5 Atom PSU: The Dot series can be used with the X5 Atom PSU with a single fixture on each output and the PSU configured in the dedicated 'booster' mode for the Dot series. Refer to the release notes of the X5 Atom PSU.
- Fixtures:
  - TW Pinspot
  - X5 Dot Wash
  - TW Dot Wash
- 4-Pin XLR extension cables
- 4-Pin XLR Y-split cable
- Seetronic True1 Power cable 1.5m

For a minimal system a user thus needs:

- Fixture
- PSU: this can be user supplied and is compatible with legacy PSU's.
- Power cable

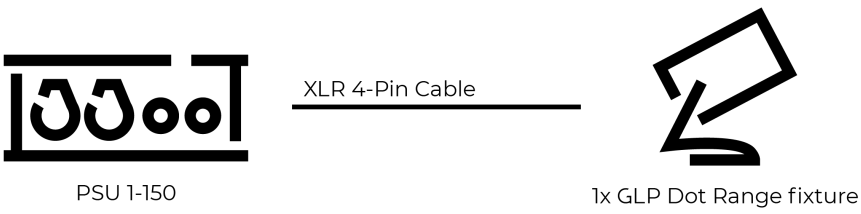

Direct connection and single Y-split connection

We recommend linking no more than two (PSU1-65) or six (PSU1-150) Y-Split Cables in a single chain. On each Y-Split Cable, one branch must connect directly to a fixture; only the other branch may be extended. Extending both branches is not permitted.

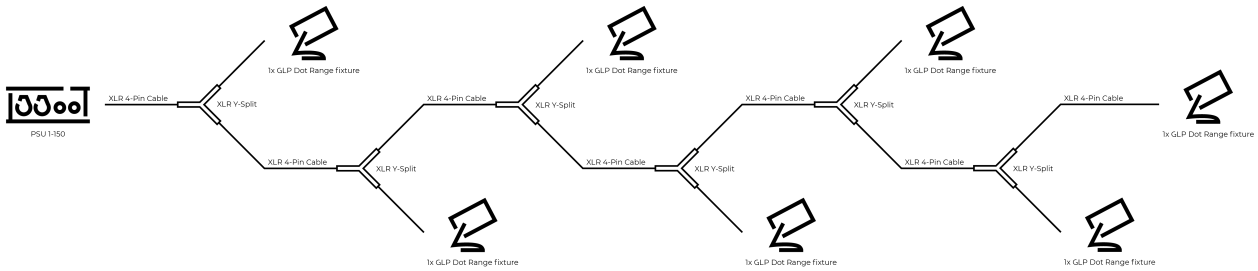

Maximal Y-split example

Connection

The fixture provides a 4-Pin Seetronic XLR connector with the following pin out:

Pin	Signal
1	Ground
2	DMX Data B
3	DMX Data A
4	V+ (24-48V DC)

Mounting

Safety Eyelet

The product provides an attachmentpoint for a safety cable on the side.

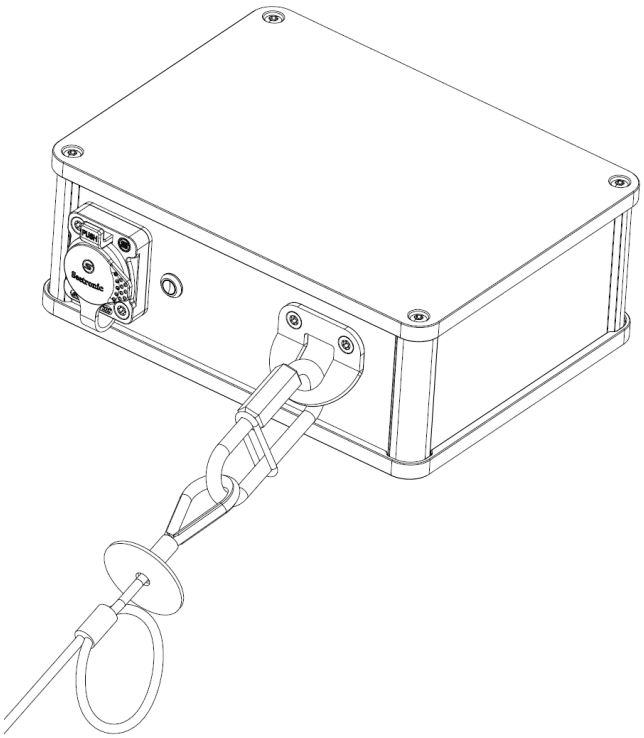

Safety cable attachment point

Truss Mounting

With the additional bracket the PSU1-150 can be attached to a truss.

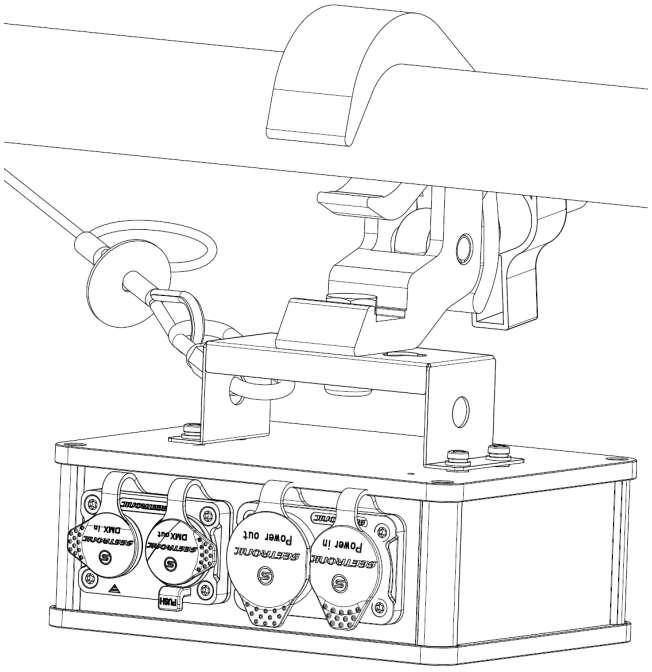

Truss mounting

Wall Mounting

The bracket also provides keyhole slots for wall mounting the PSU1-150.

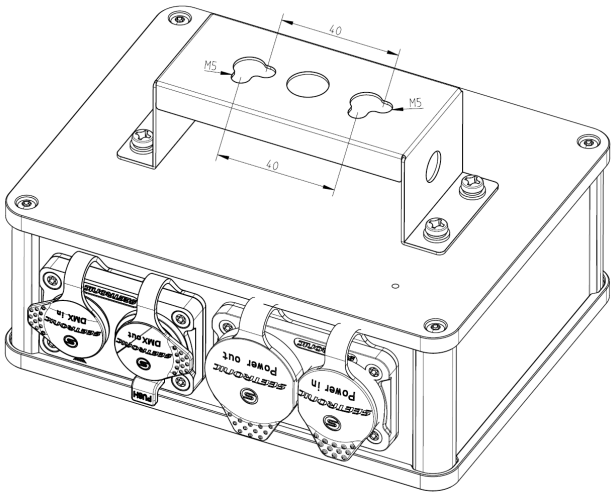

Wall-mount keyhole pattern

Technical specifications

Connections

Power	Seetronic powerCON TRUE1, In / Out
Signal	Seetronic XLR 5-pin, In / Out
	Seetronic XLR 4-pin, Out

Electrical

Power input	100–240 V AC, 50/60 Hz
Power supply	Auto-ranging electronic switch-mode
Max. power (@ 230 V)	165 W
Fuse	T3.15A 250 V, 5×20 mm
Link	5 at 100-120 V AC
	10 at 200-240 V AC

Construction and installation

Housing	Black; high-impact flame-retardant aluminum
Protection rating	IP65
Mounting	Wall/clamp mounting bracket; 1 eyelets for safety cable
Orientation	Any
Location	Temporary outdoor

Thermal

Cooling	Convection; automatic overheating protection
Ambient temperature	5°C to 45°C (40°F to 113°F)
Min. distance to combustibles	0.1 m

Dimensions

Height	58.8 mm
Height, with bracket	92.3 mm
Width	154 mm
Depth	141.3 mm
Net weight	1,31 kg / 2.88lbs

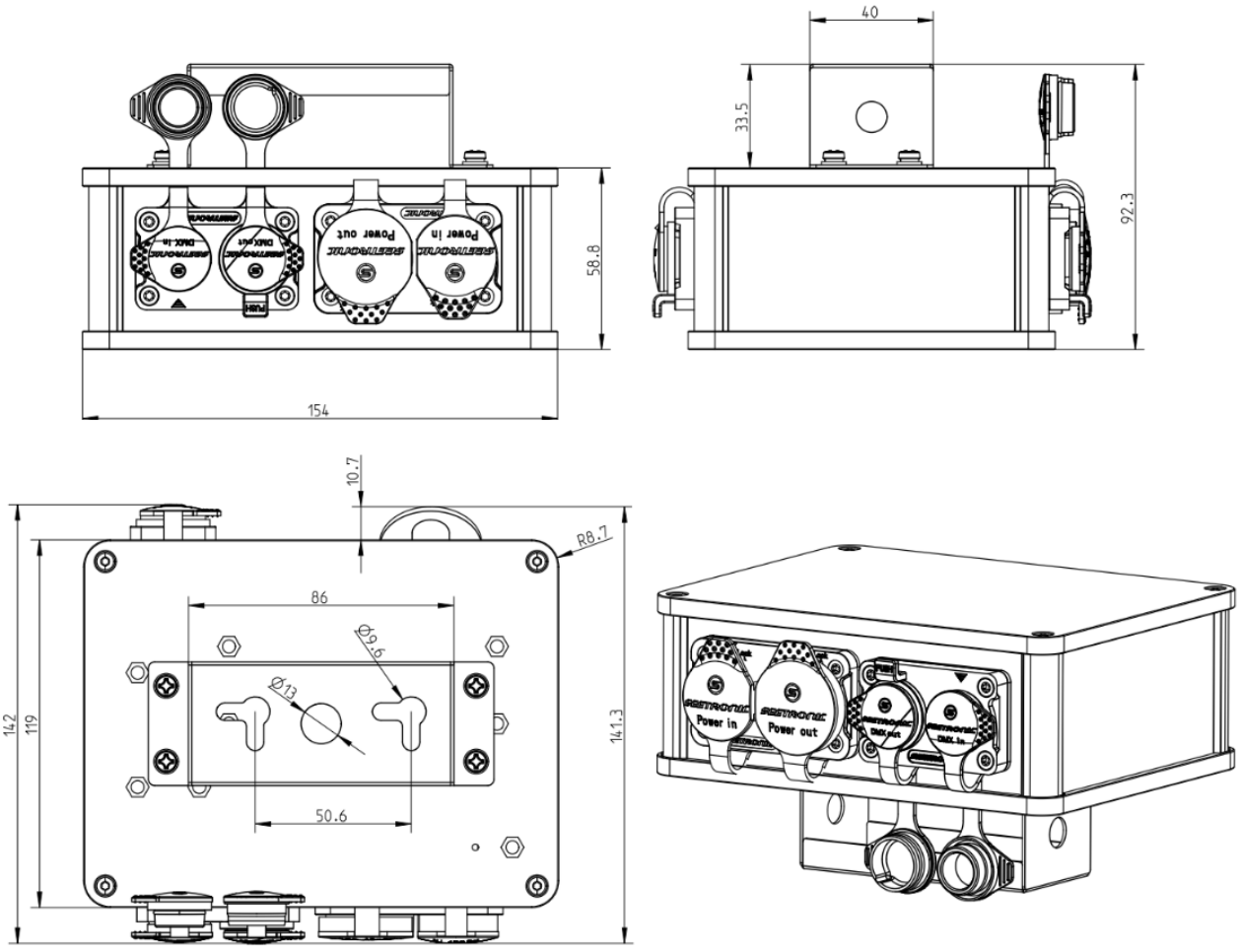

PSU1-150 Dimensions